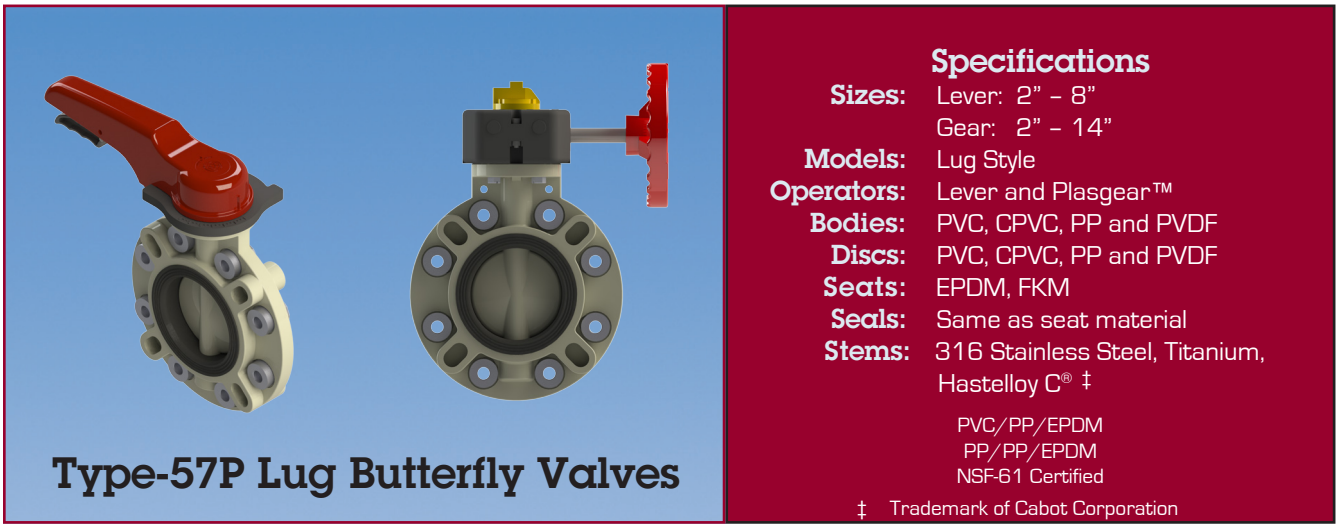

Type-57P Lug Butterfly Valves

Specifications

Sizes:	Lever: 2” – 8” Gear: 2” – 14”
Models:	Lug Style
Operators:	Lever and Plasgear™
Bodies:	PVC, CPVC, PP and PVDF
Discs:	PVC, CPVC, PP and PVDF
Seats:	EPDM, FKM
Seals:	Same as seat material
Stems:	316 Stainless Steel, Titanium, Hastelloy C® ‡

PVC/PP/EPDM
PP/PP/EPDM
NSF-61 Certified

‡ Trademark of Cabot Corporation

Specifications

- Type-57P butterfly valve
- PVC Body 2”, 2-1/2” and 14” – Other PVC sizes T-57IL butterfly valve
- CPVC Body 2” – 8”
- PP & PVDF body 2” - 14”
- Machined lug outsert design in 316SS (Standard), Titanium or Hastelloy C ®
- Machined-body design eliminates lug rotation
- Permanent factory assembly using custom design tools
- No valve flow directional requirement
- Requires no downstream mating flange for end-of-line applications*
- Full pressure rated when used with downstream mating flange
- Mating flange bolts length determination table provided by flange type

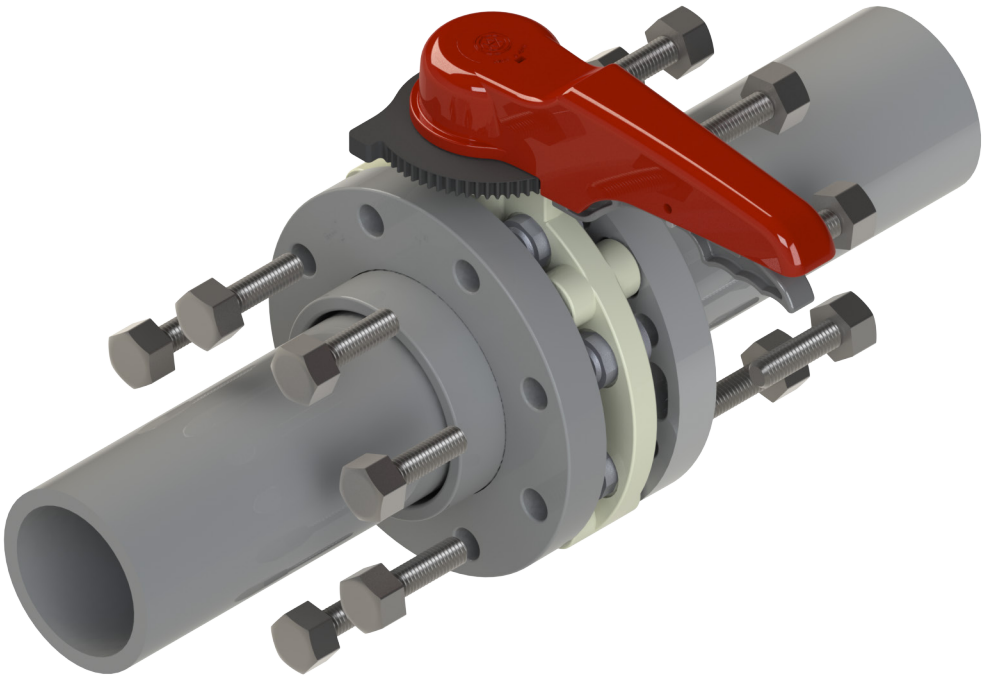

* Please refer to pressure vs temperature chart on next page.

Type-57P - True Lug Butterfly Valves

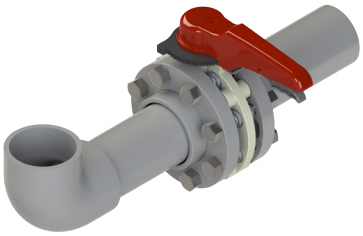

Installed between 2 Flanges

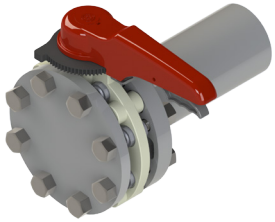

Blind Flange Installed

Pressure vs. Temperature (psi, water, non-shock)*

Body		PVC			CPVC CPVC				PP PP, PVDF		PVDF PVDF			
Disc		PVC	PP, PVDF											
Nominal Size		30°F 120°F	30°F 120°F	121°F 140°F	30°F 140°F	141°F 160°F	161°F 176°F	177°F 195°F	-5°F 140°F	141°F 175°F	-5°F 140°F	141°F 175°F	176°F 210°F	211°F 250°F
Inches	mm													
2"	50	150	150	70	150	120	100	55	150	100	150	100	85	75
2-1/2"	65	150	150	70	-	-	-	-	150	100	150	100	85	75
3"	80	150	150	70	150	120	100	55	150	100	150	100	85	75
4"	100	150	150	45	150	120	100	55	150	100	150	100	85	75
6"	150	150	150	45	150	120	100	55	150	100	150	100	85	75
8"	200	150	150	40	150	120	100	55	150	85	150	85	75	60
10"	250	150	150	40	-	-	-	-	150	85	150	85	75	60
12"	300	100	100	30	-	-	-	-	100	60	100	60	45	30
14"	350	100	100	30	-	-	-	-	100	45	100	45	30	15

* Pressure table applies when downstream mating flange or blind flange is properly attached and torqued
FKM seat butterfly valves have a low temperarture limit of 23°F, regardless of body/disc material.

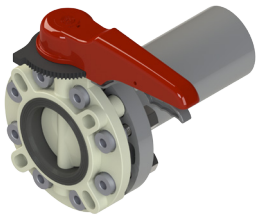

No Downstream Flange Installed

Pressure vs. Temperature (psi, water, non-shock)**

Body		PVC			CPVC CPVC			PP PP, PVDF		PVDF PVDF			
Disc		PVC	PP, PVDF										
Nominal Size		30°F 120°F	30°F 120°F	121°F 140°F	30°F 140°F	141°F 175°F	176°F 195°F	-5°F 140°F	141°F 175°F	-5°F 140°F	141°F 175°F	176°F 210°F	211°F 250°F
Inches	mm												
2"	50	110	110	75	110	75	40	110	75	110	75	65	55
2-1/2"	65	110	110	75	-	-	-	110	75	110	75	65	55
3"	80	***	***	***	110	75	40	110	75	110	75	65	55
4"	100	***	***	***	110	75	40	110	75	110	75	65	55
6"	150	***	***	***	110	75	40	110	75	110	75	65	55
8"	200	***	***	***	110	75	40	110	65	110	65	55	45
10"	250	***	***	***	-	-	-	110	65	110	65	55	45
12"	300	***	***	***	-	-	-	75	45	75	45	35	25
14"	350	75	75	30	-	-	-	75	35	75	35	25	12

**Pressure table applies only when no downstream flange is attached.
*** See Type-57IL overmolded Lug body valve
FKM seat butterfly valves have a low temperature limit of 23°F regardless of body/disc material

www.asahi-america.com • asahi@asahi-america.com • Tel: 800-343-3618 • 781-321-5409 • Fax: 800-426-7058

Type-57P – True Lug Butterfly Valves

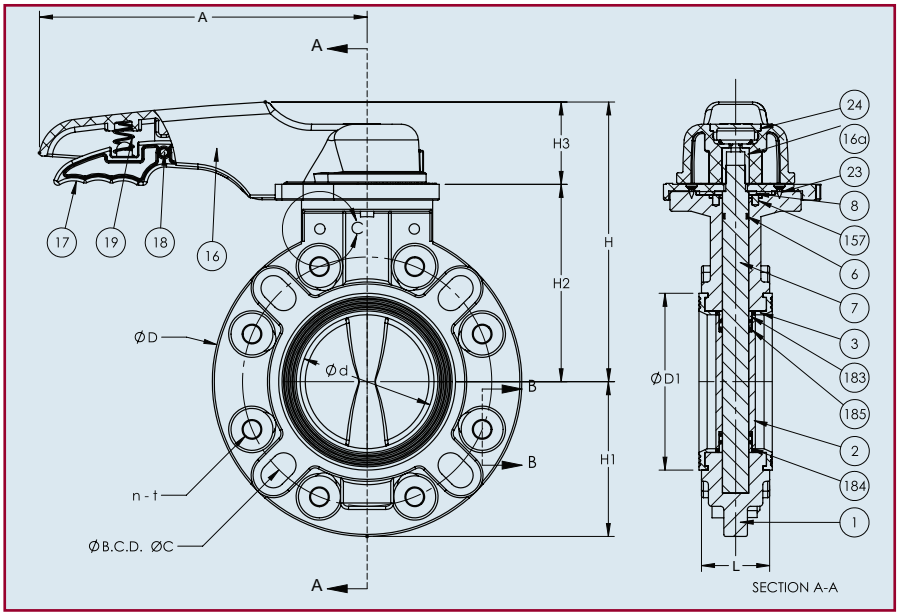

Dimensions (Sizes 2" – 8")

Nominal Size		d	ANSI Class 150			D	D1	L	L2	H	H1	H2	H3	A
Inches	mm		C	n	t									
2"	50	2.20	4.75	4	5/8" - 11 UNC	6.50	3.23	1.65	1.45	6.54	3.25	4.33	2.20	8.66
2-1/2"	65	2.72	5.50	4	5/8" - 11 UNC	7.28	3.78	1.81	1.45	6.93	3.64	4.72	2.20	8.66
3"	80	3.03	6.00	4	5/8" - 11 UNC	8.31	4.17	1.81	1.45	7.52	4.15	5.31	2.20	9.84
4"	100	4.02	7.50	8	5/8" - 11 UNC	9.37	5.31	2.20	1.45	8.11	4.69	5.91	2.20	9.84
6"	150	5.91	9.50	8	3/4" - 10 UNC	11.22	7.52	2.80	2.30	9.92	5.61	7.20	2.72	12.60
8"	200	7.68	11.75	8	3/4" - 10 UNC	13.39	9.53	3.43	2.30	11.14	6.69	8.43	2.72	15.75

Note: The shape and appearance of assembly differ a little with nominal size compared to the drawing

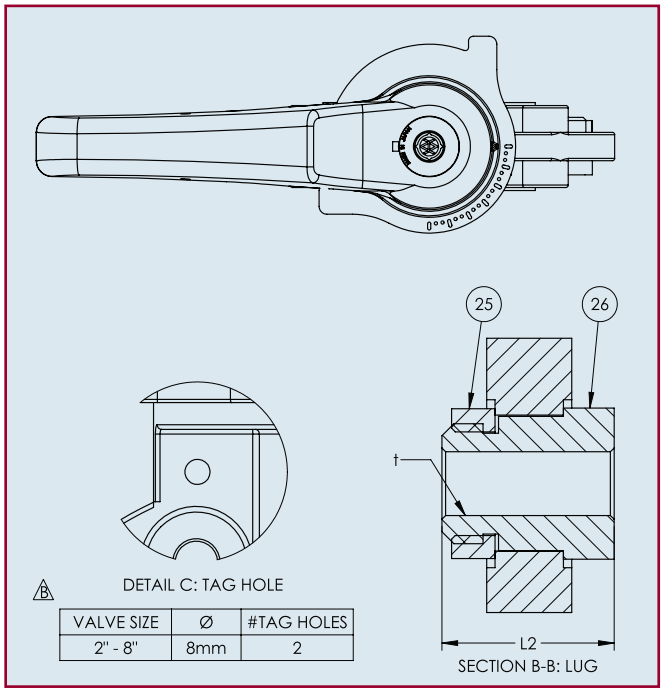

VALVE SIZE	Ø	#TAG HOLES
2" - 8"	8mm	2

Parts List (Lever: Sizes 2" – 8")

NO.	DESCRIPTION	PCS.	MATERIAL
1	Body	1	PVC, CPVC, PP, PVDF
2	Disc	1	PVC, CPVC, PP, PVDF
183	Seat bush (A)	1	PVC, PP, PVDF*
184	Seat bush (B)	1	PVC, PP, PVDF*
3	Seat	1	EPDM, FKM, NBR
6	O-ring (C)	1	EPDM, FKM, NBR
185	O-ring (I)	4	EPDM, FKM, NBR
7	Stem	1	316 Stainless Steel
8	Stem Retainer	1	PP
16	Handle	1	PP
16A	Metal Handle Insert	1	Stainless Steel 316L
17	Handle Lever	1	PPG
18	Pin	1	PPG
19	Spring	1	Stainless Steel 304
20	Washer (A)	1	Stainless Steel 304
21	Bolt (B)	1	Stainless Steel 304
22	Locking Plate	1	PPG
23	Screw (B)	4	Stainless Steel 304
24	Cap (A)	1	PP
25	Lug Outsert Nut	n	316SS
26	Lug Outsert	n	316SS

*used for CPVC and PVDF

n - See dimensions table for number of bolt holes by valve size

Type-57P - True Lug Butterfly Valves

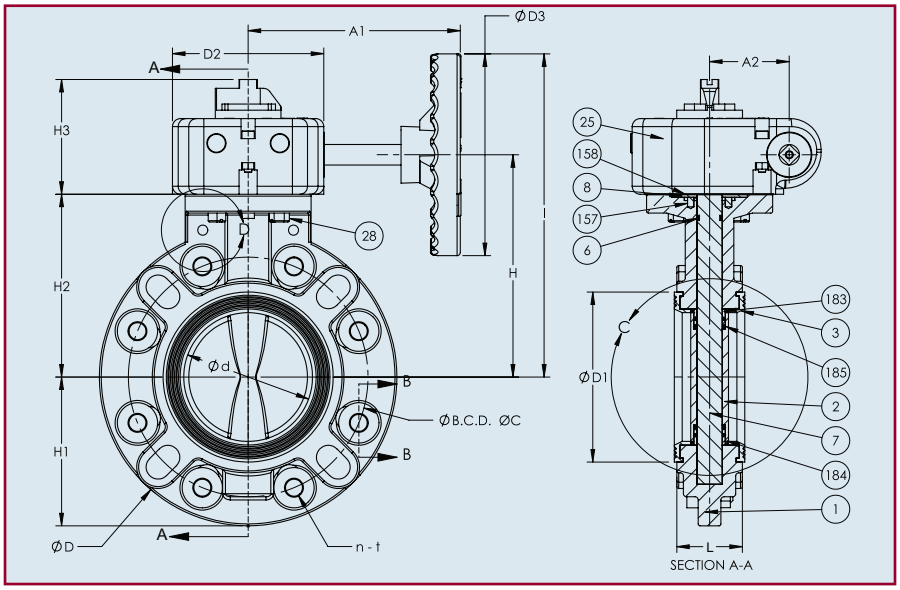

Dimensions (Sizes 2" – 14")

Nominal Size		d	ANSI Class 150		T	D	D1	D2	D3	L	H	H1	H2	H3	I	A1	A2	Number of handle rotations	Gear Box Type
Inches	mm		C	n															
2"	50	2.20	4.75	4	5/8"- 11 UNC	6.50	3.23	4.80	6.30	1.65	1.45	5.51	3.25	4.13	3.54	8.66	6.57	9.5	Type 241
2-1/2"	65	2.72	5.50	4	5/8"- 11 UNC	7.28	3.78	4.80	6.30	1.81	1.45	5.91	3.64	4.53	3.54	9.06	6.57		
3"	80	3.03	6.00	4	5/8"- 11 UNC	8.31	4.17	4.80	6.30	1.81	1.45	6.50	4.15	5.12	3.54	9.65	6.57		
4"	100	4.02	7.50	8	5/8"- 11 UNC	9.37	5.31	4.80	6.30	2.20	1.45	7.09	4.69	5.71	3.54	10.24	6.57		
6"	150	5.91	9.50	8	3/4" - 10 UNC	11.22	7.52	4.80	6.30	2.80	2.3	8.27	5.61	6.89	3.54	11.42	6.57		
8"	200	7.68	11.75	8	3/4" - 10 UNC	13.39	9.53	4.80	6.30	3.43	2.3	9.49	6.69	8.11	3.54	12.64	6.57		
10"	250	9.84	14.25	12	7/8" - 9 UNC	16.57	11.89	4.80	6.30	4.33	3.97	10.87	8.31	9.49	3.62	14.02	6.57		
12"	300	11.93	17.00	12	7/8" - 9 UNC	19.21	14.17	7.40	11.81	5.08	3.97	13.39	9.61	11.73	4.25	19.29	10.71		Type 243
14"	350	13.82	18.75	12	1"- 8 UNC	21.22	15.47	7.40	11.81	5.08	4.39	14.45	10.63	12.80	4.25	20.35	10.71		

Note: The shape and appearance of assembly differ a little with nominal size compared to the drawing

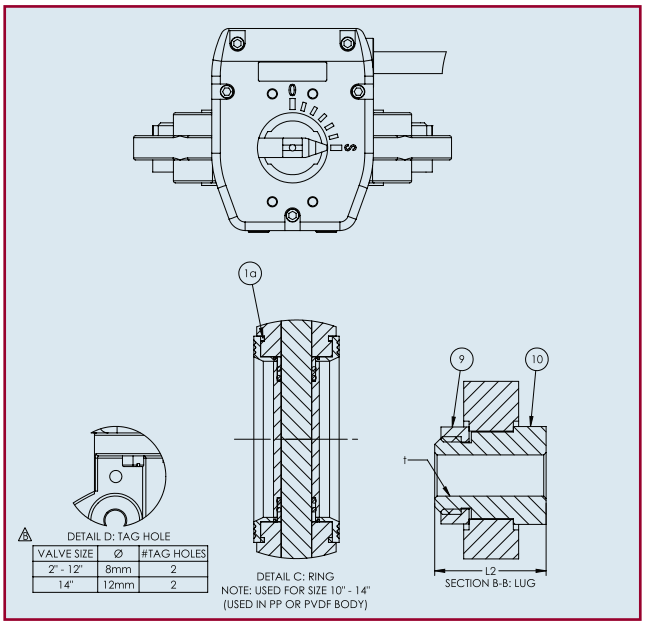

Parts List (Gear: Sizes 2" – 14")

PARTS			
NO.	DESCRIPTION	PCS.	MATERIAL
1	Body	1	PVC, CPVC, PP, PVDF
2	Disc	1	PVC, CPVC, PP, PVDF
183	Seat bush (A)	1	PVC, PP, PVDF*
184	Seat bush (B)	1	PVC, PP, PVDF*
3	Seat	1	EPDM, FKM, NBR
6	O-ring (C)	1	EPDM, FKM, NBR
185	O-ring (I)	4	EPDM, FKM, NBR
7	Stem	1	316 Stainless Steel
8	Stem Retainer	1	PP
157	Screw (F)	4	Stainless Steel 304
25	Gearbox	1	Plasgear™
28	Bolt (C)	4	Stainless Steel 304
158	Gasket	1	EPDM
1a	Ring* *	2	S20C C/S Trivalent White
9	Lug Outsert Nut	n	316SS
10	Lug Outsert	n	316SS

*Used for CPVC and PVDF
* * Used for PP & PVDF body 10"-14"
n - See dimensions table for number of bolt holes by valve size

www.asahi-america.com • asahi@asahi-america.com • Tel: 800-343-3618 • 781-321-5409 • Fax: 800-426-7058

Type-57P - Lug Butterfly Valves

Weight. (lbs.)

Nominal Size		PVC		CPVC		PP		PVDF	
Inches	mm	Lever	Gear	Lever	Gear	Lever	Gear	Lever	Gear
2"	50	4.6	9	4.6	10.5	4	8.5	3.7	9.75
2-1/2"	65	5	10	-	-	4.5	8.75	4.2	10.1
3"	80	-	-	12.25	10	4.75	9.3	4.9	10.6
4"	100	-	-	8	12.5	7	11.4	6.4	13.4
6"	150	-	-	20	23.5	17	20.5	15.2	25.25
8"	200	-	-	27.5	31	23.12	26.5	24.3	34.5
10"	250	-	-	-	-	-	46.25	-	60.25
12"	300	-	-	-	-	-	72.25	-	95.24
14"	350	-	95	-	-	-	86	-	109

Cv Values

Nominal Size		CV values at various opening degrees		
Inches	mm	30°	60°	90°
2"	50	7	73	120
2-1/2"	65	15	153	250
3"	80	18	183	300
4"	100	28	287	470
6"	150	66	671	1100
8"	200	150	1525	2500
10"	150	232	2355	3860
12"	300	342	3477	5700
14"	350	386	3928	6440

Vacuum Service-Lever

Nominal Size		Inches of Mercury
Inches	mm	
2"	50	-29.92
2-1/2"	65	-29.92
3"	80	-29.92
4"	100	-29.92
6"	150	-29.92
8"	200	-29.92

Vacuum Service-Gear

Nominal Size		Inches of Mercury
Inches	mm	
2"	50	-29.92
2-1/2"	65	-29.92
3"	80	-29.92
4"	100	-29.92
6"	150	-29.92
8"	200	-29.92
10"	250	-29.92
12"	300	-23.62
14"	350	-23.62

Lug Bolt

Nominal Size		Qty Bolts Required	Bolt Thread and Pitch
Inches	mm		
2"	50	4	5/8" - 11 UNC
2-1/2"	65	4	5/8" - 11 UNC
3"	80	4	5/8" - 11 UNC
4"	100	8	5/8" - 11 UNC
6"	150	8	3/4" - 10 UNC
8"	200	8	3/4" - 10 UNC
10"	250	12	7/8" - 9 UNC
12"	300	12	7/8" - 9 UNC
14"	350	12	1" - 8 UNC

Bolt Lengths TBD based on flange type

Sample Specification

Butterfly valves shall be Type-57P Lug style PVC, CPVC, PP or PVDF body with PVC, CPVC, PP or PVDF disc and either EPDM or FKM seat and seals. The valve body shall be factory-machined on both sides to accept 316SS Lug outserts and nuts. The liner shall be full seat design fully molded around the body where as only the disc and seat are wetted parts, feature raised convex rings on the face and are intended to be utilized as the mating flange gaskets. Valve shall have a spherical disc design with disc bushings with double O-ring seals for a high cycle life and ultimate sealing. Valve body shall have integral molded body stops and seat relief area to prevent over-tightening of the mating flanges from influencing valve operating torque. Valves shall accept flat faced flanges in accordance with ANSI B16.5 bolt pattern for 150-pound flanges and be capable of having opposing flangeds installed individually. Valve stem shall be 316SS, have PP stem retainer for valve stem retention, be non-wetted, and have engagement over the full length of the spherically designed disc. Valves shall be equipped with either Lever handle or Plasgear™ operator for manual operation. For lockout applications, the valve lever handle (sizes 1-1/2" – 8") shall have a molded provision for a padlock. The valve body shall feature two molded tag holes for the user. Valves sizes 1-1/2" – 14" shall feature a molded ISO 5211 bolt pattern for accessory mounting. PVC shall conform to ASTM D1784, Cell Classification 12454A, CPVC to ASTM D1784, Cell Classification 23567A, PP to ASTM D4101 Cell Classification PP0210B67272, and PVDF to ASTM D3222-91A, Cell Classification Type II.