REV	DESCRIPTION	DFTG	CHK	DATE
A	INTIAL RELEASE	—	—	—
B	MINIMAL CHANGES	JJG	DH/LL	3/21/07
C	CHANGES PER ECR# 007-08	JJG	KB	4/2/08
D	CHANGES PER ECR# 016-08	JJG	KB	8/28/08

FOR OTHER REVISIONS SEE ECO HISTORY FILE.

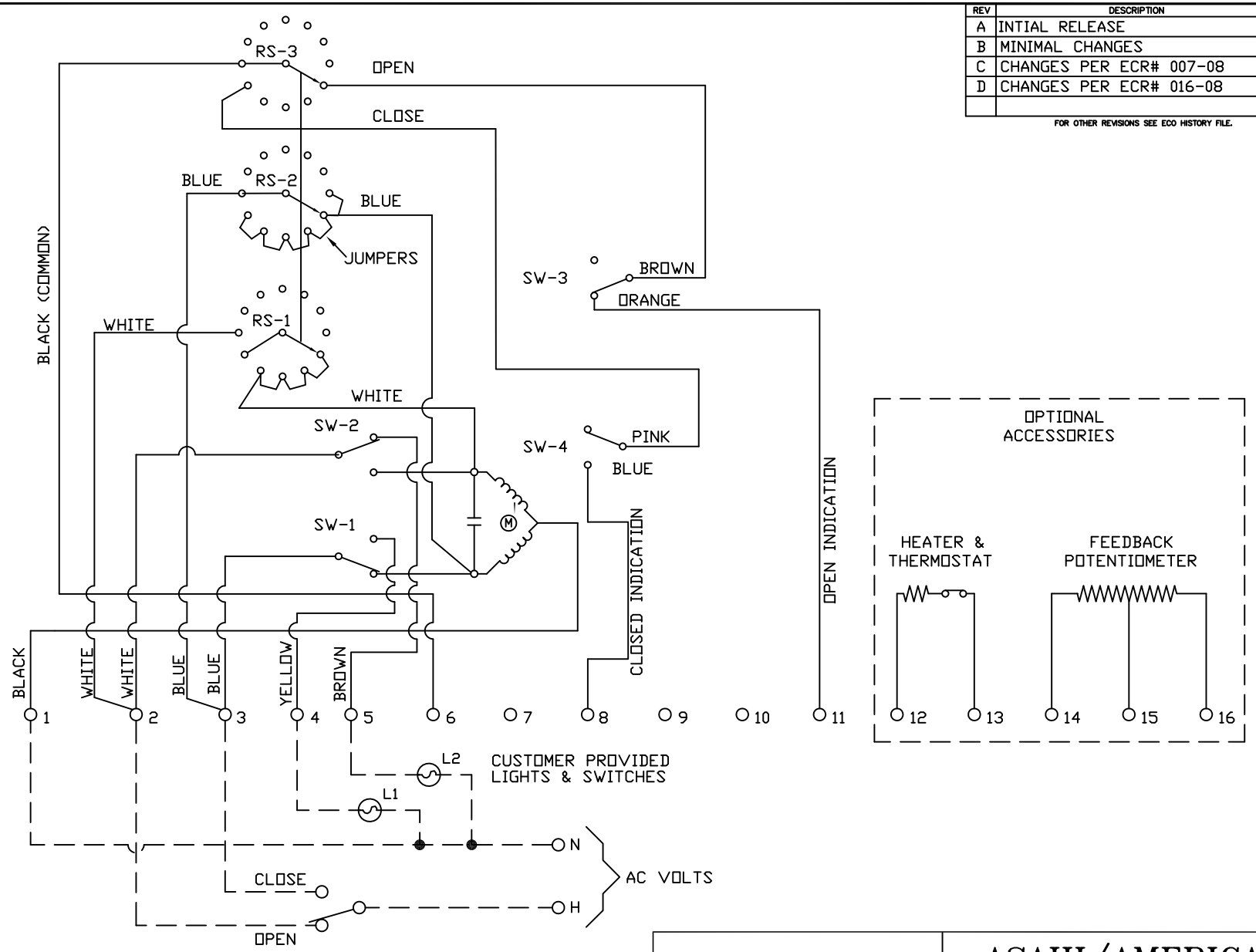

THIS DRAWING AND ALL INFORMATION HEREON IS THE PROPERTY OF ASAHI/AMERICA. ANY COPYING, REPRODUCTION OR UNAUTHORIZED USE IS FORBIDDEN WITHOUT WRITTEN CONSENT.

	NAME	DATE
DR	JOHN GLASSFORD	3/21/07
APPD	DAVE HURLEY	3/21/07
PROD	LEO LESTER	3/21/07
WO#/CO#		
FILE		

ASAHI/AMERICA
ISO 9001 CERTIFIED
35 GREEN STREET, P.O. BOX 653, MALDEN, MA.

SERIES 92 WIRING DIAGRAM MULTITURN 2XLS H&T FEEDBACK POT

SIZE	DWG. NO.	REV
A	0025EL	D

SCALE NTS

SHEET 1 OF 1